CRISTINA

Spare Parts List

CRIBA22713 | Blade Series | Matt Black

How to request a replacement

Quote CRIBA22713, purchase details and a photograph of the installed item and required component. Identify the component using the original Cristina exploded view appended to this list.

Manufacturer reference	Selection
CRIAR20465Q00	Common reference
CRICF26296Q00	Common reference
CRICR24287Q00	Common reference
CRIMV20138P00	Common reference
CRIMV24313P...	Finish 13
CRIPZ25464P...	Finish 13
CRIPZ25465P...	Finish 13
CRIRI071S...	Finish 13
CRIUD425S...	Finish 13

Finish-dependent references

References shown with three dots are part families, not complete order codes. Use finish 13 Matt Black. The list selects families shown for this finish in Cristina's model table and common references. Confirm the complete order reference against the appended exploded view and the supplied product revision before ordering.

Manufacturer model: CRIBA227. Original Cristina spare-parts sheet follows; it retains the manufacturer callouts and revision.

BLADE

CRIBA227

SCHEDA RICAMBI | SPARE PARTS SHEET
rev.01_02/2025

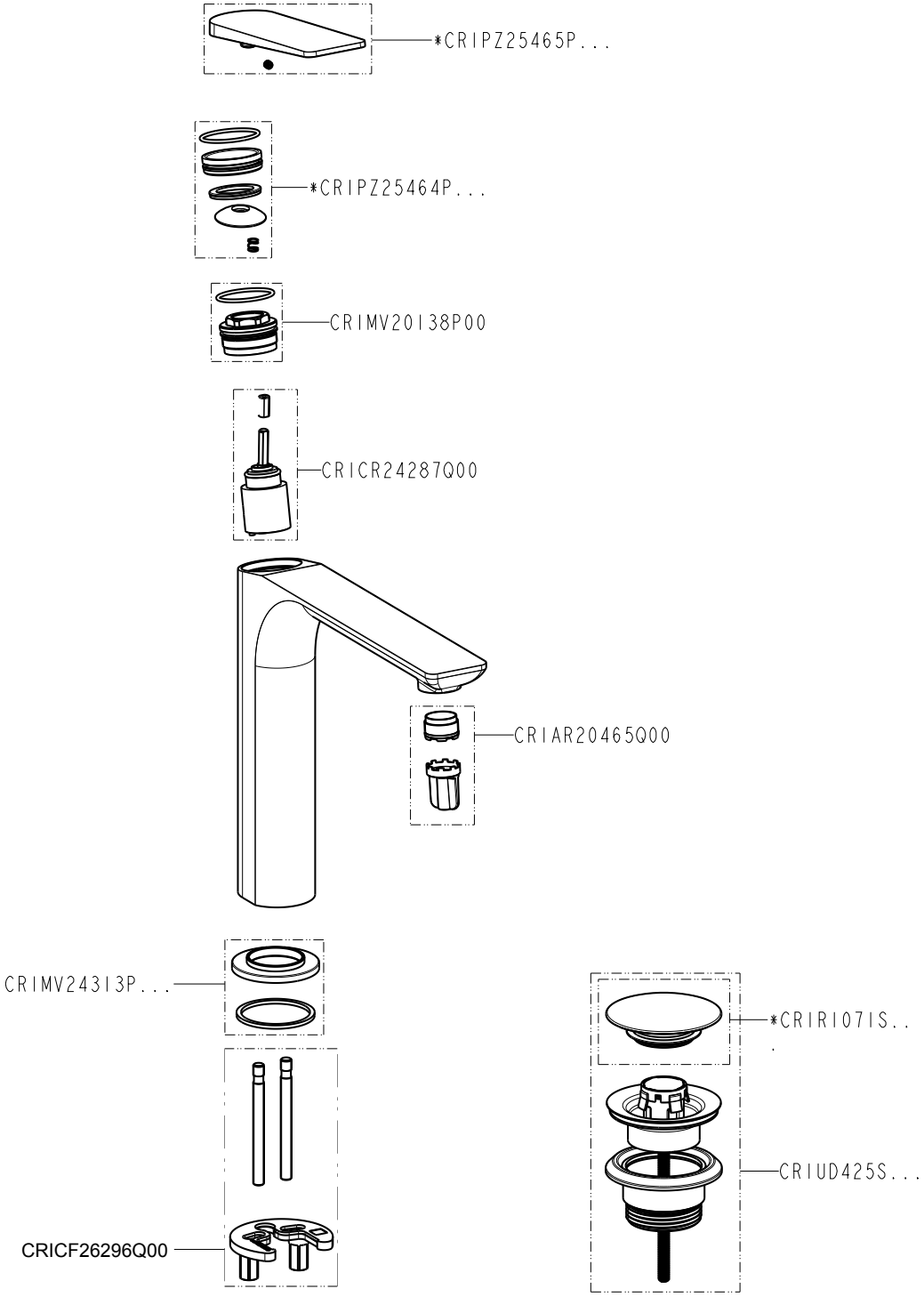

NOTE | NOTES

* completare con codice finitura | complete with finishing code

CRISTINA S.r.l. a socio unico
via G. Fava, 56 - 28024 Gozzano (NO) Italy - phone +39 0322 9545
fax +39 0322 956556 - info@cristinagroup.com
cristinarubinetterie.com

CRISTINA
RUBINETTERIE